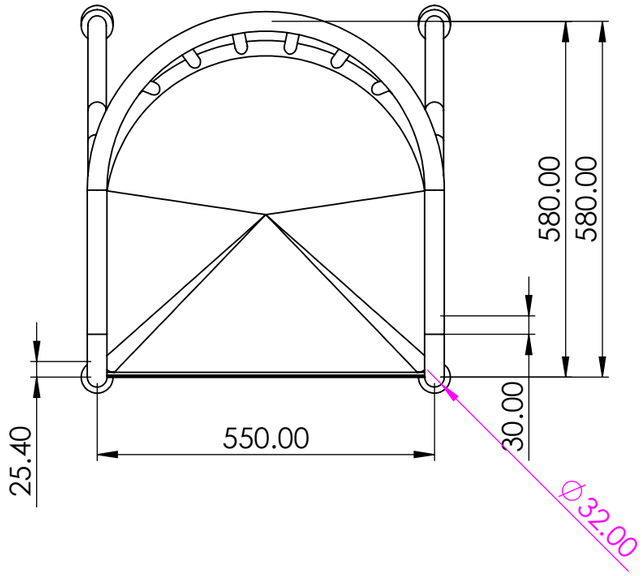


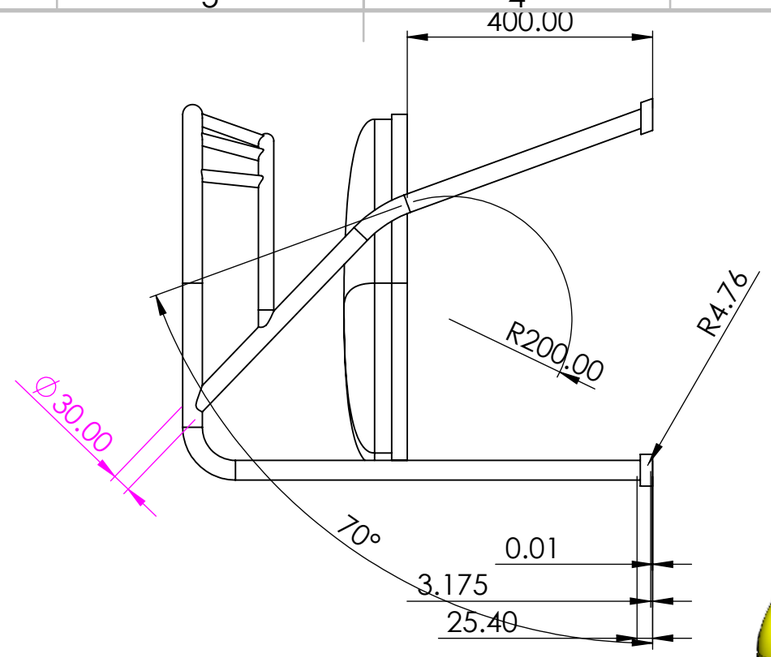


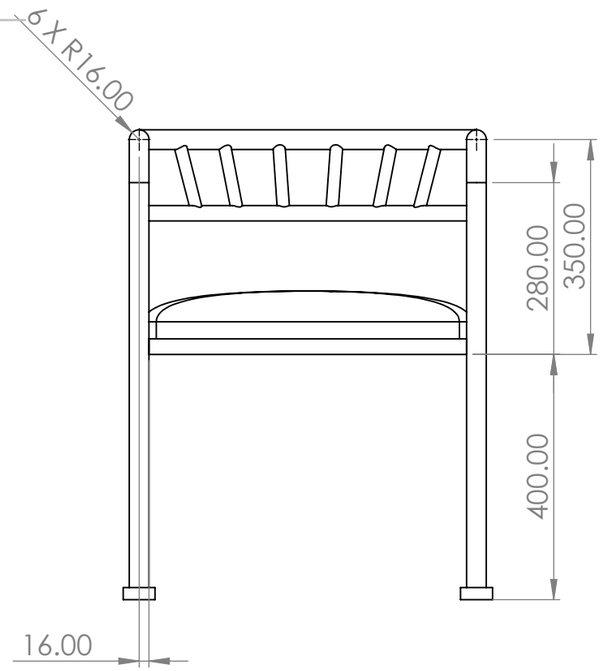


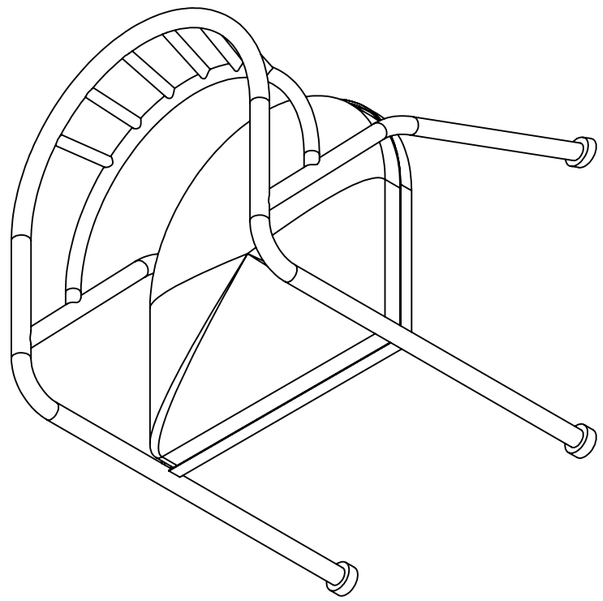

| | | | | | | | |
|---|---|---|---|---|---|---|---|
| UNLESS OTHERWISE SPECIFIED:<br>DIMENSIONS ARE IN MILLIMETERS<br>SURFACE FINISH:<br>TOLERANCES:<br>LINEAR:<br>ANGULAR: | FINISH: | | | DEBURR AND BREAK SHARP EDGES | DO NOT SCALE DRAWING | REVISION | |
| | NAME | SIGNATURE | DATE | | TITLE: | | |
| DRAWN | DHEERAJ KUMAR | | | | | | |
| CHK'D | | | | | | | |
| APPV'D | | | | | | | |
| MFG | | | | | | | |
| Q.A | | | | MATERIAL: | DWG NO. Leisure Chair | | A3 |
| | | | | WEIGHT: | SCALE:1:10 | SHEET 1 OF 1 | |

SOLIDWORKS Educational Product. For Instructional Use Only.